UNIT IV

Algorithmic State Machines

ASM Chart

- It is similar to conventional flowchart but interpreted in different manner.
- It is a graphical view.
- ASM chart is basically flowchart for hardware algorithm.
- It considers timing relationships.
- It is useful to design the hardware of a sequential circuits as per the specifications.
- It is suitable for describing the sequential

ASM Chart Notations

- The state box
- The decision box
- The conditional box

State box

- The state box is used for indicating the state of the controller in the control sequence
- The shape of a state box is rectangular.
- Inside the box we write information such as register operations or output value for given state.
- For each state there is one entry and exit point.

Cntd…

- On the right side of the box binary code of each state is written.

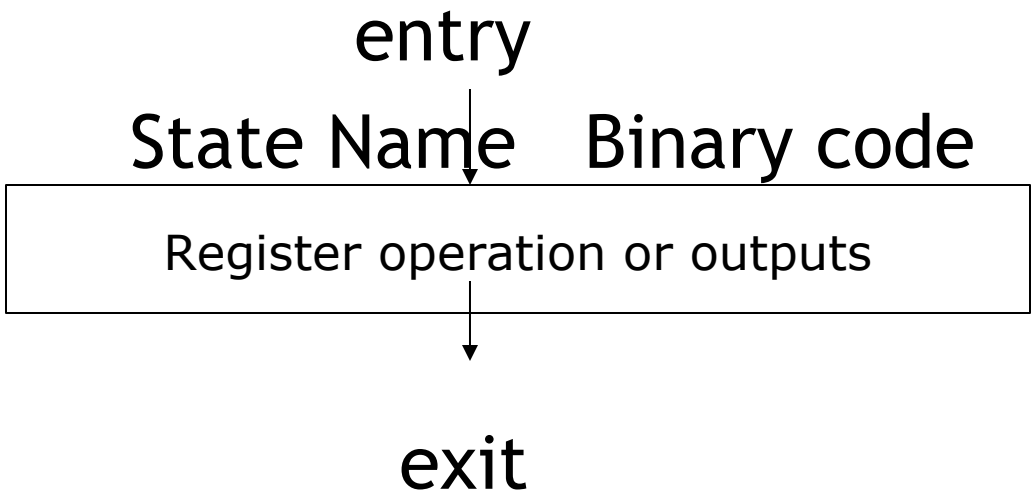

Cntd…

- Example

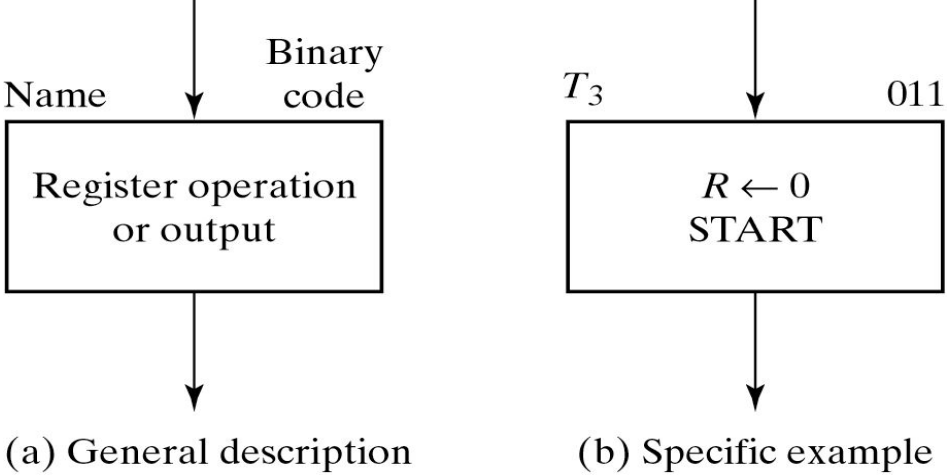

Fig. 8-3 State Box

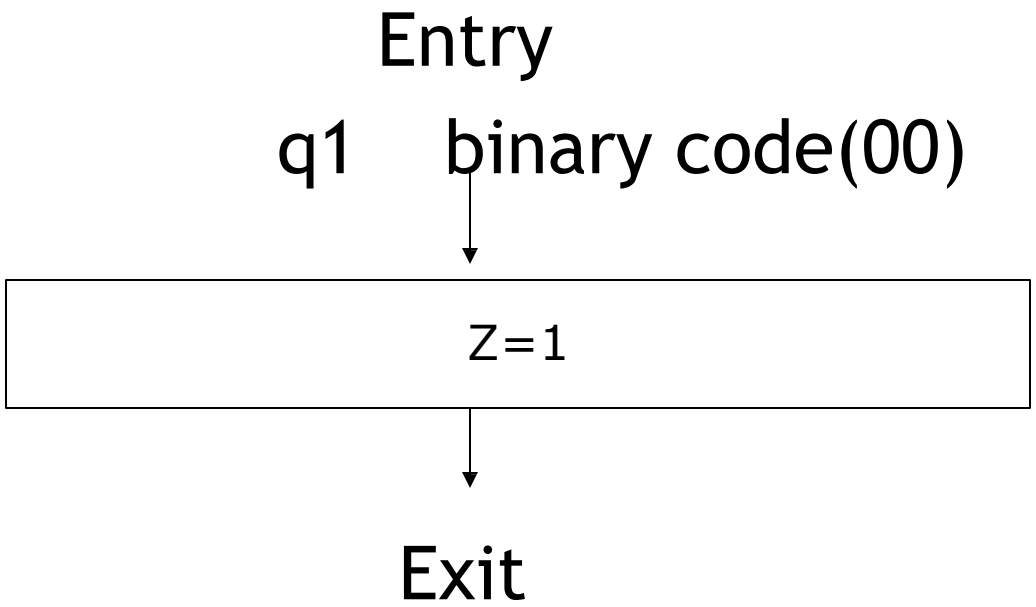

Decision box

- The decision box is diamond shaped box.
- It has two or more exit paths.
- A decision box may be conditioned on a signal or a test of some kind.

Cntd…

- Decision box has exit path that checks condition true or false.

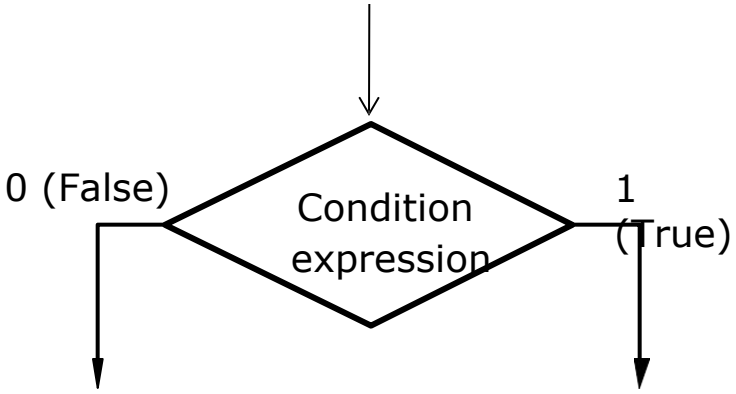

Conditional box

- It is oval shaped.
- The input path to the conditional box must come from one of the exit paths of the decision box.

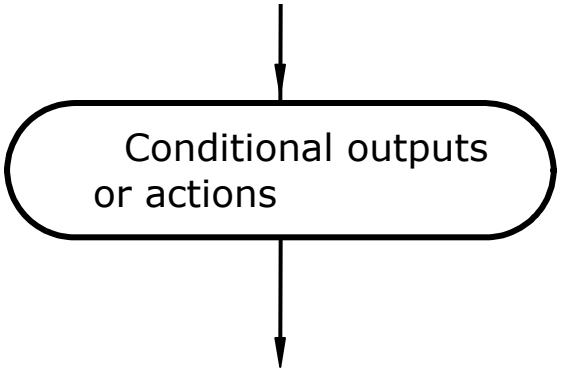

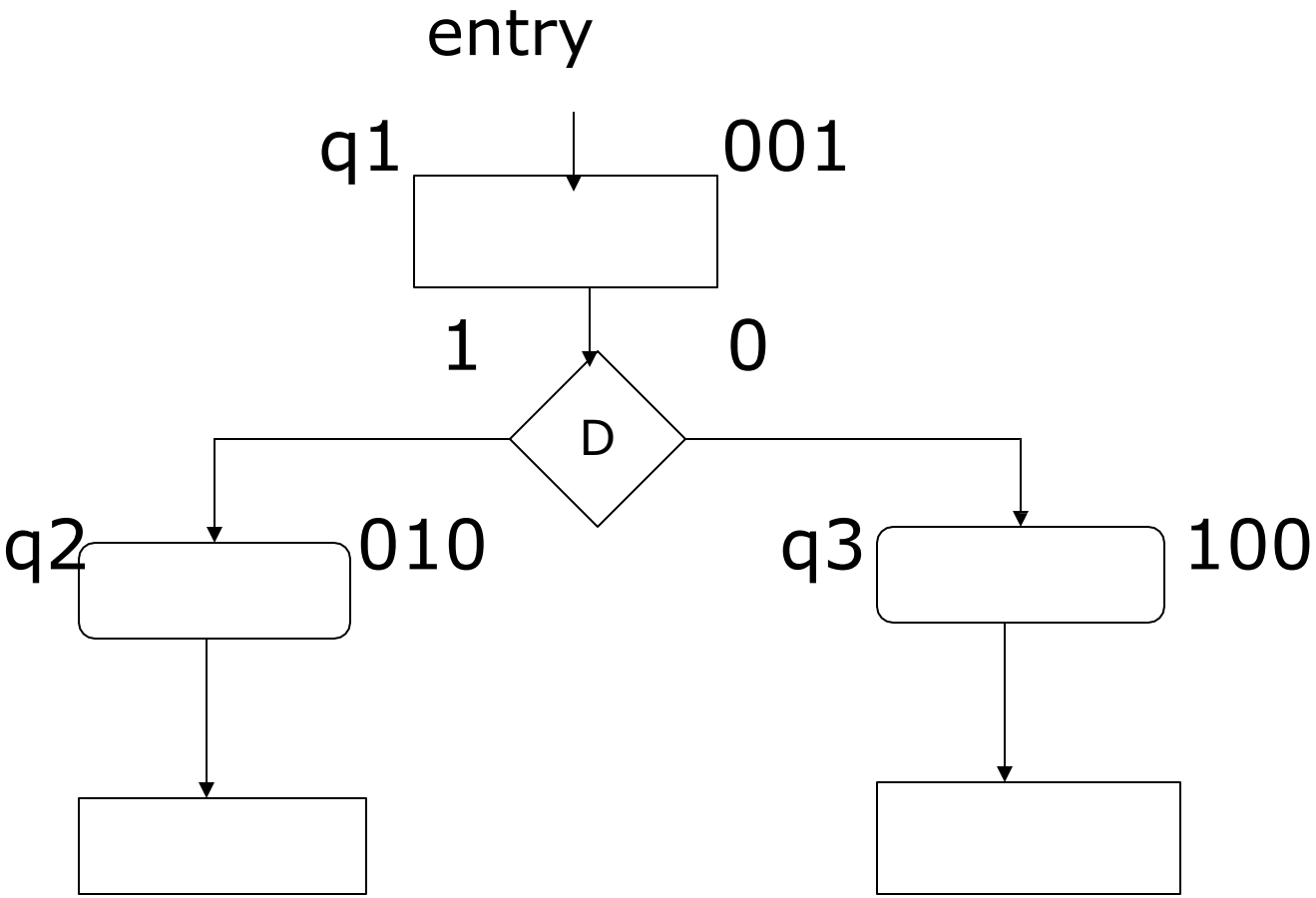
entry
q1
001
1
0
D
q2
010
q3
100

ASM Chart Notations (how to remember in 1slide only)

The state box	The decision box	The conditional box
It is used for indicating the state of the controller in the control sequence	It describes the effect of an input on the control.	Its rounded corners are different from the state box
It is rectangular in shape.	It is diamond shaped box.	It is oval shaped.
In this box, information will be written as register operations or output value for given state.	The input condition to be tested will be written inside.	The input path to this box must come from one of the exit paths of the decision box.
For each state there is one entry and exit point.	It has two or more exit paths.	These are familiar in conventional flowcharts.
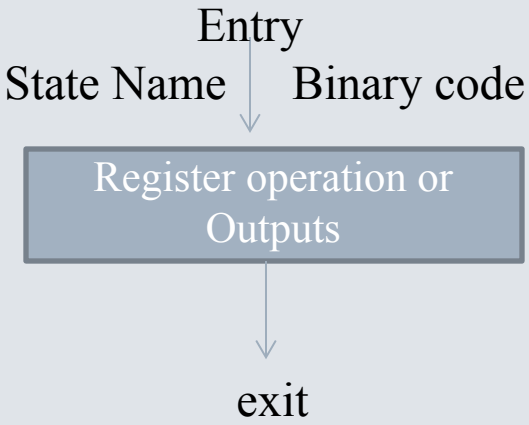	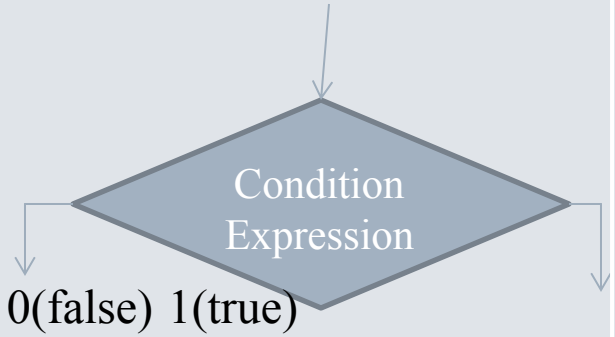	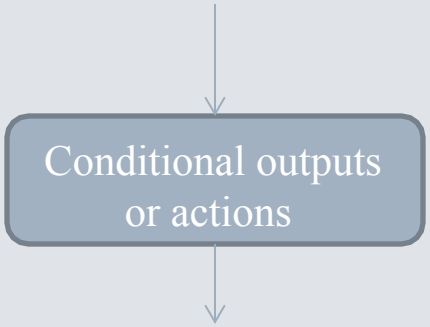

Draw ASM chart for given diagram

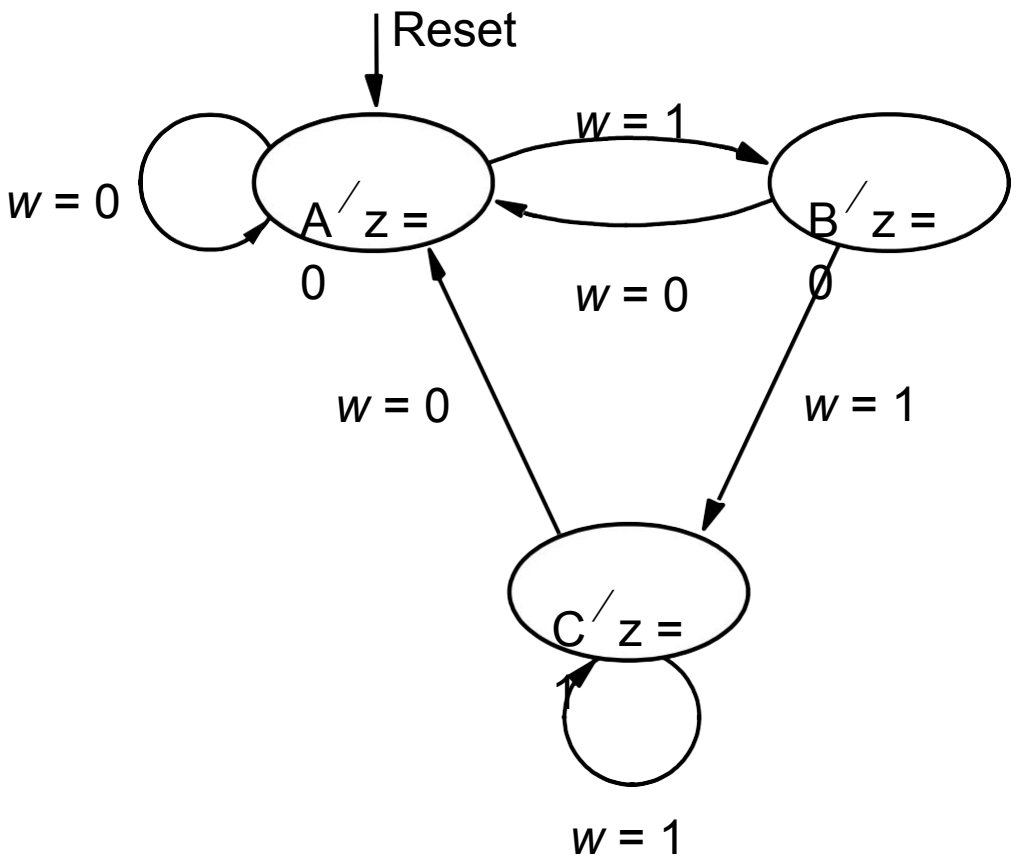

State table

Present state	Next state		Output
	$w = 0$	$w = 1$	z
A	A	B	0
B	A	C	0
C	A	C	1

ASM Chart

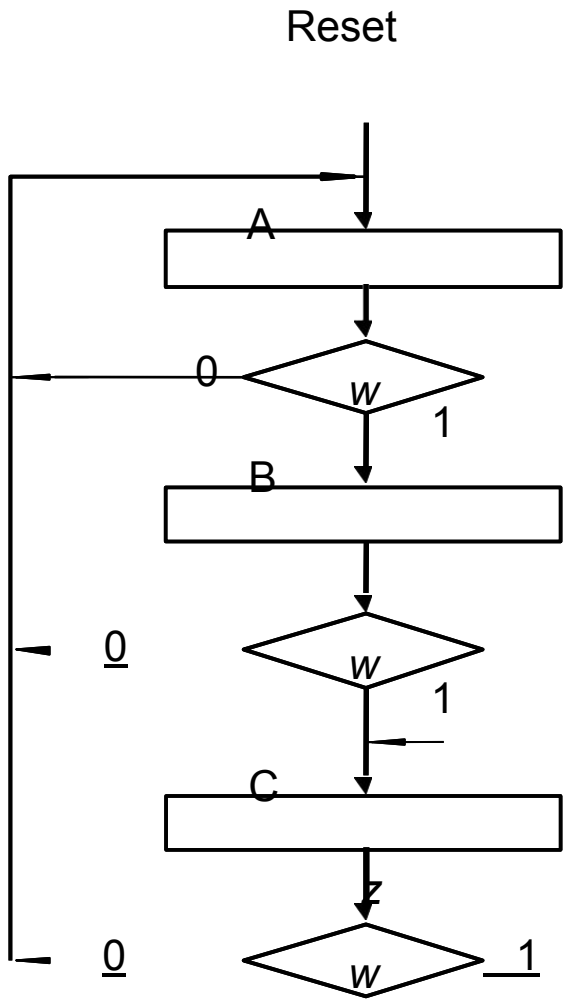

Example 2:

- Draw an ASM Chart for a 2-bit binary counter having enable line E such that E=1 (counting enabled), E = 0 (hold present state)

State Diagram

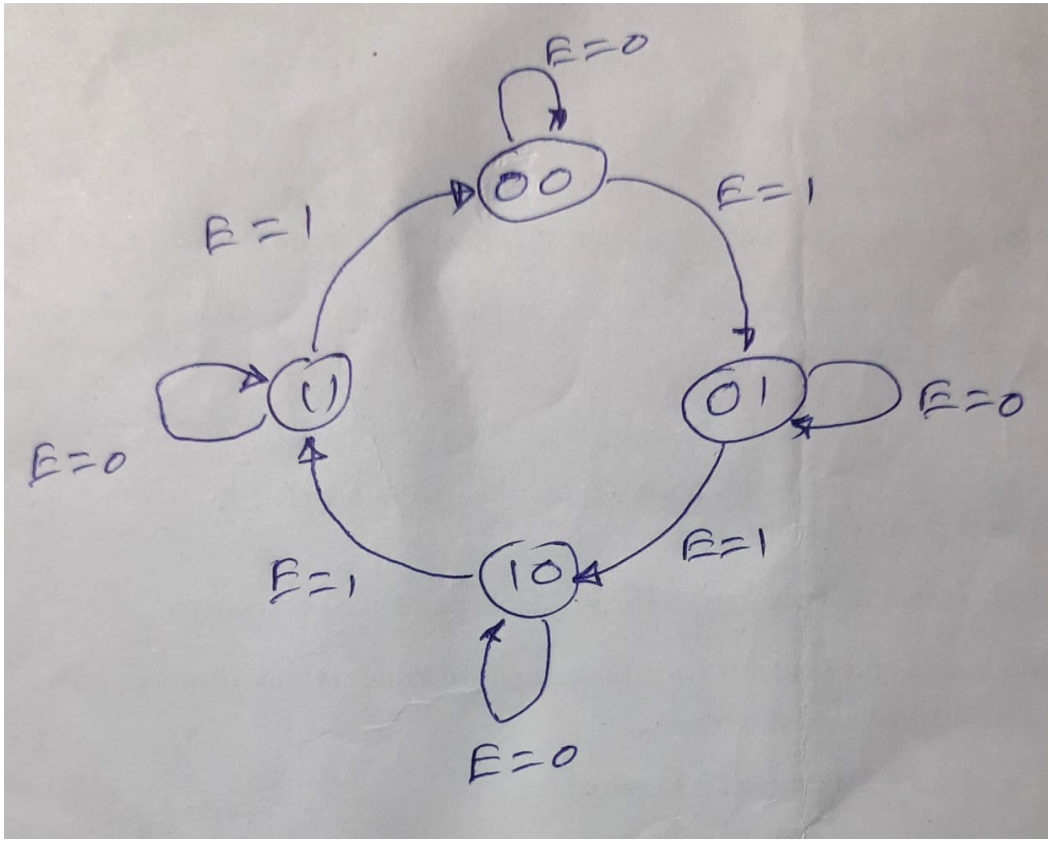

ASM Chart

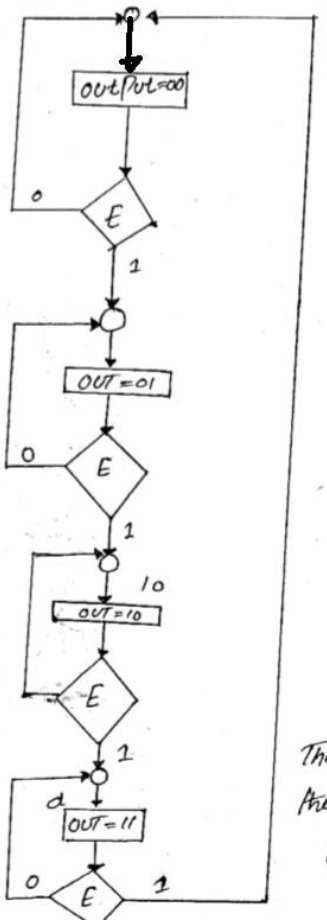

The output represe.
the output of the
Counter

Example 3:

- Draw an ASM Chart for a 2-bit up/down counter having a mode control input M. For M=1: count up, M=0:count down

  [Homework]

The circuit should produce output = 1 whenever the count becomes minimum (00) or maximum (11). Since number of bits = 2 there will be four states namely S_0, S_1, S_2 and S_3 corresponding to 00, 01, 10, 11 and let Y = output.

e diagram : The diagram is shown ig. P. 8.2.1(a). Up ting takes place for 1 and the counter resses as S_0, S_1, S_2,

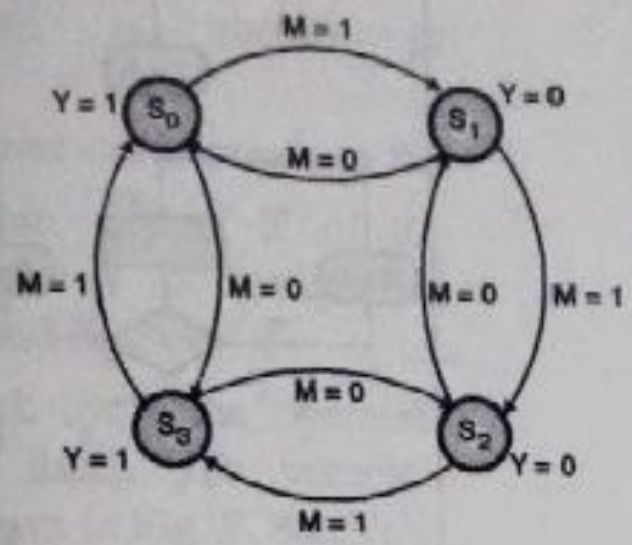

(a) State diagram of a 2 bit up down counter

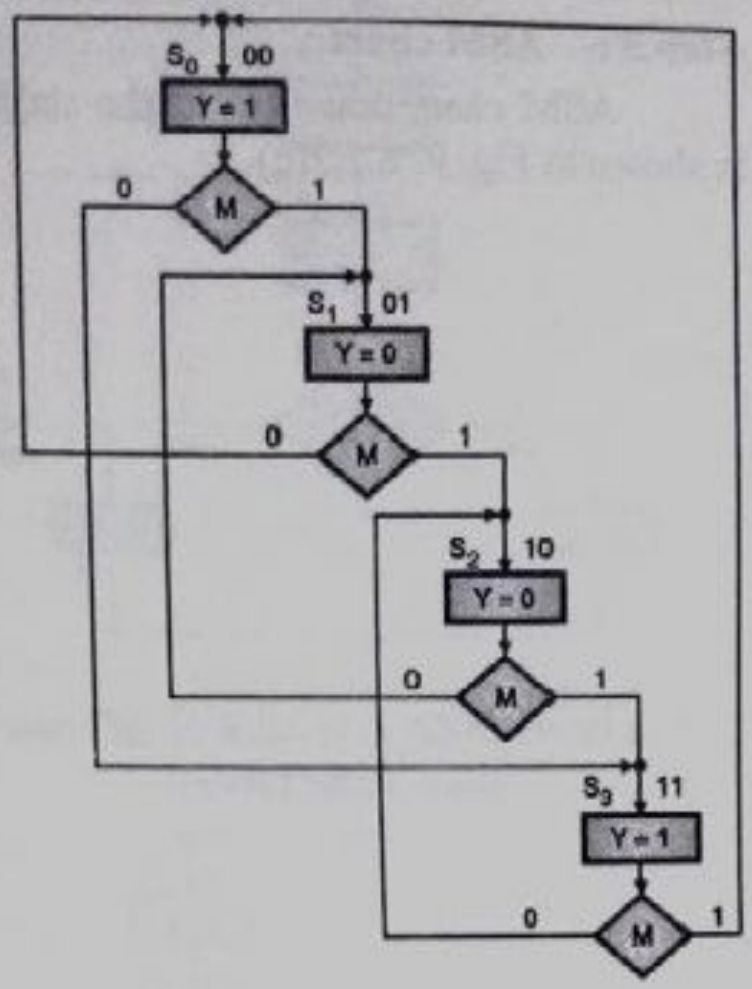

(b) ASM chart of a 2 bit up down counter

(C-1580) **Fig. P. 8.2.1**

Example 5:

- Draw an ASM Chart for the synchronous circuit having the following description: the circuit has a control input C, clock and outputs X, Y and Z. If C=1, on every clock rising edge the code on XYZ changes from 000 → 010 → 100 → 110 → 000 and repeats. If C = 0, the circuit holds the present state.

Soln. :

Step 1 : State diagram :

- Let the four states be defined as follows :

  $q_0 = 00, q_1 = 01, q_2 = 10, q_3 = 11.$

- The state diagram is shown in Fig. P. 8.3.4(a).

Step 2 : Draw the ASM chart :

- The ASM chart is shown in Fig. P. 8.3.4(b).

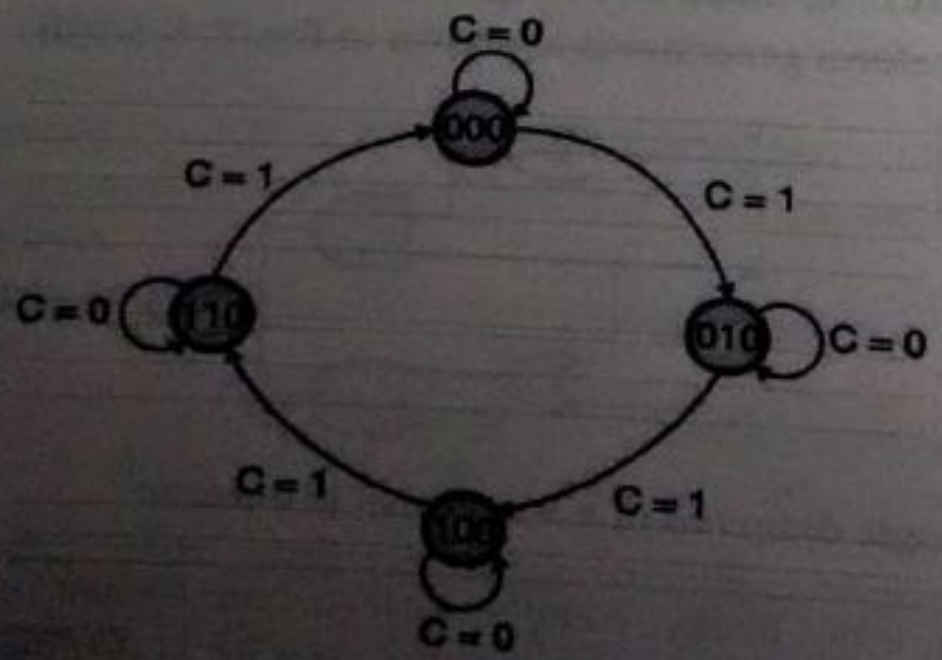

(C-1996) **Fig. P. 8.3.4(a) : State diagram**

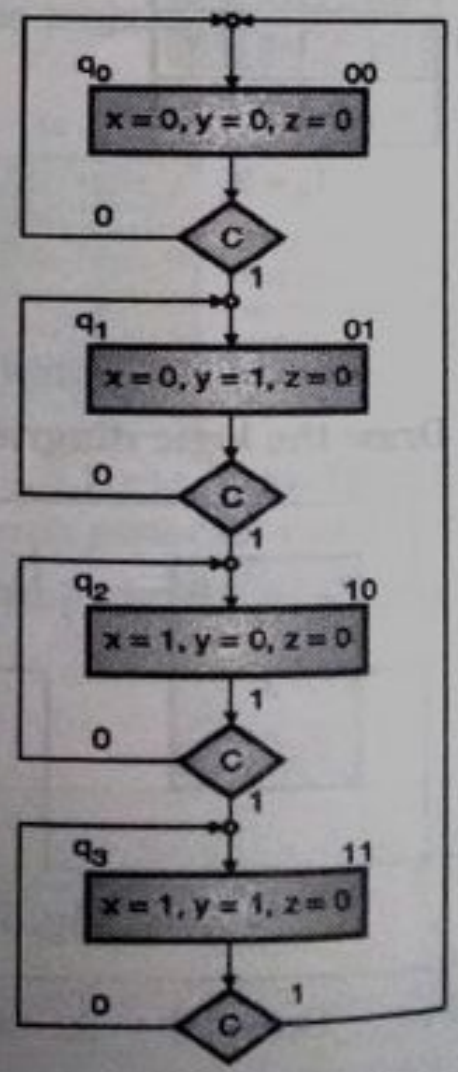

(C-1996) **Fig. P. 8.3.4(b) : ASM ch**

Thank you!